Patriot 9500

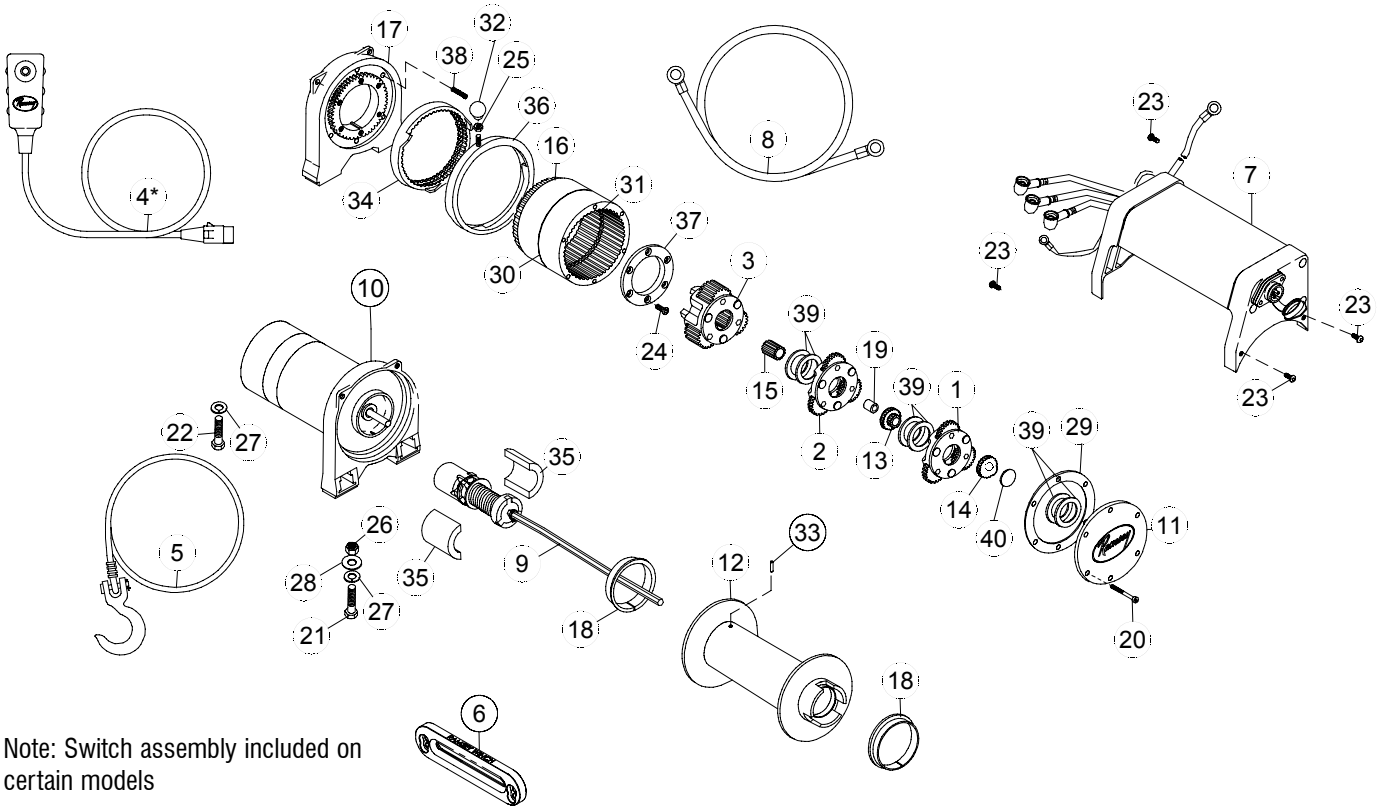

* Note: Switch assembly included on certain models

Patriot 9500 Winch Parts List

Item No.	Qty.	Part No.	Description	Item No.	Qty.	Part No.	Description
1	1	247009	GEAR CARRIER ASSY - INPUT	20	6	414159	CAPSCREW 5/16-18NC X 2-1/2 HX HD NYLOK
2	1	247022	GEAR CARRIER ASSY - INTERMEDIATE	21	4	414316	CAPSCREW 3/8-16NC X 1-1/4 HX HD
3	1	247023	GEAR CARRIER ASSY - OUTPUT	22	1	414370	CAPSCREW 3/8-24NC X 1/2 HX HD
*4	1	251110	SWITCH ASSY	23	4	414823	CAPSCREW 1/4-20NC X 3/4 SOC BT HD
5	1	251262	ROPE ASSY	24	6	414861	CAPSCREW 1/4-20NC X 3/4 FL SOC HD NYLOK
6	1	251266	ALUMINUM HAWSE FAIRLEAD	25	1	418029	NUT 5/16-18NC HEX JAM PLTD
7	1	278182	SOLENOID ASSY - 12V	26	4	418035	NUT 3/8-16NC HEX REG PLTD
	1	278186	SOLENOID ASSY - 24V	27	5	418177	LOCKWASHER-3/8 ID MED SECT PLTD
8	1	289141	CABLE ASSY - GROUND	28	4	418181	WASHER-FLAT 3/8 ID SAE PLTD
9	1	296181	BRAKE/SHAFT ASSY	29	1	442208	GASKET-COVER
10	1	296570	MOTOR-12V	30	1	442219	GASKET-RING GEAR
	1	296591	MOTOR-24V	31	1	444077	GEAR-RING INPUT
11	1	328138	COVER-GEAR HOUSING	32	1	452001	KNOB SHIFTER
12	1	332193	DRUM-CABLE	33	1	470053	ROLL PIN 1/8 DIA X 3/8
13	1	334147	GEAR-INTERMEDIATE SUN	34	1	477002	LOCKING RING
14	1	334154	GEAR-INPUT SUN	35	2	477004	RING-HALF
15	1	334170	GEAR-OUTPUT SUN	36	1	477011	CAM RING
16	1	334171	GEAR-RING, OUTPUT	37	1	479007	RETAINER-RING GEAR
17	1	338332	END BEARING-GEAR HOUSING	38	6	494077	SPRING
18	2	412056	BUSHING-DRUM	39	6	518020	THRUST WASHER
19	1	412061	BUSHING-SHAFT	40	1	518027	THRUST DISC